8ft - ROUND DISPLAY

1:2

Front

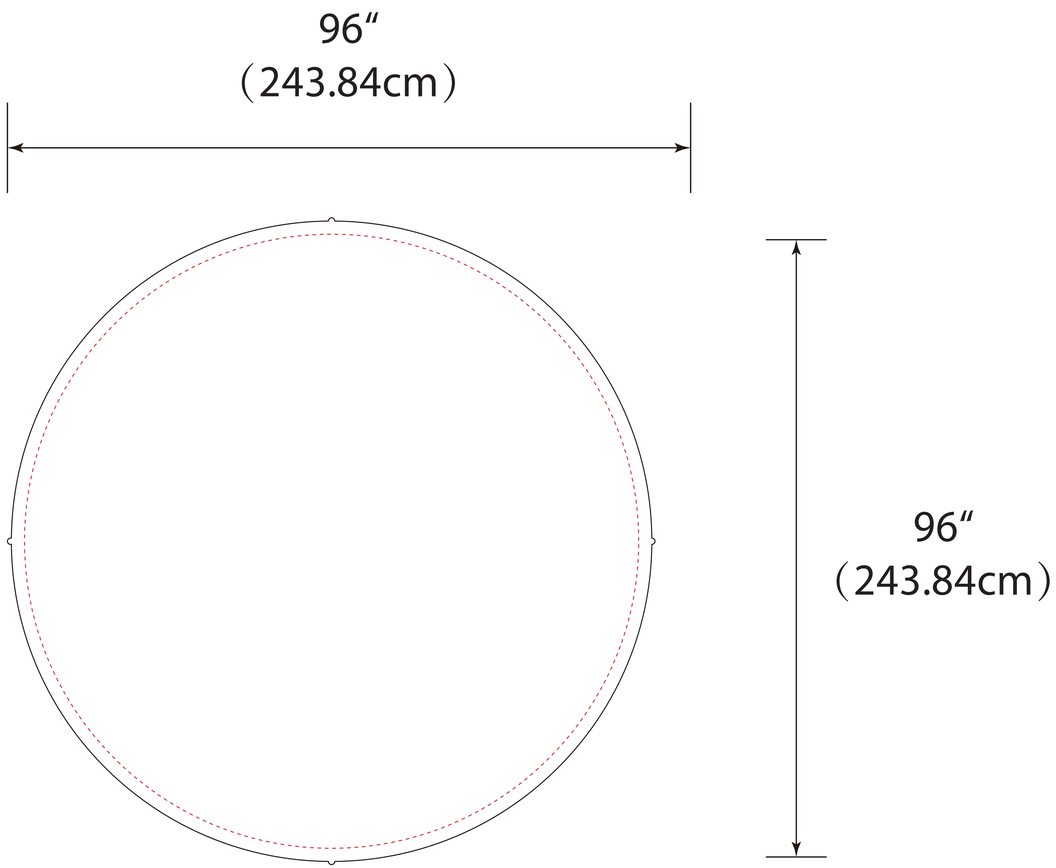

Back

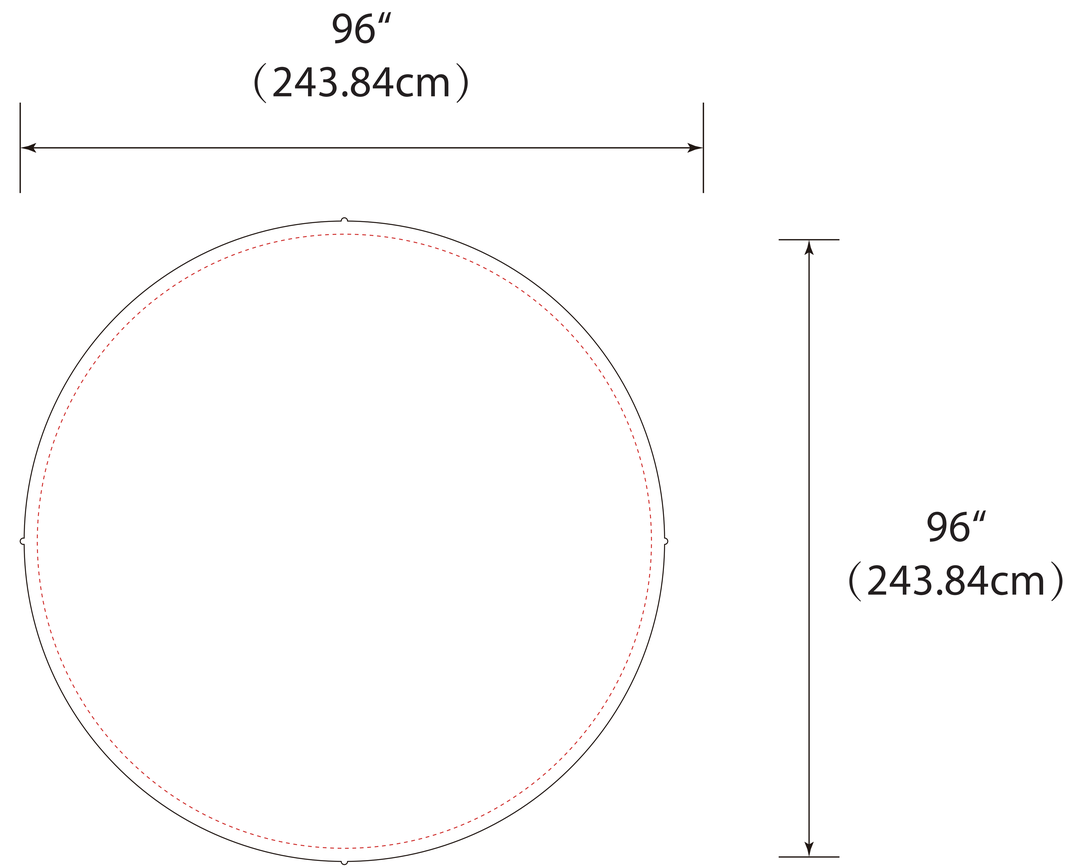

FOR BEST RESULTS, design your artwork using this template in Illustrator. Template scale is 1:2 ratio.
Images other than vector designs used must be 200 DPI for best results. Save file as AI or PDF with layers.

If using Photoshop, make sure that all sizes are correct as Photoshop may distort and resize template. Save at a minimum 100 DPI.